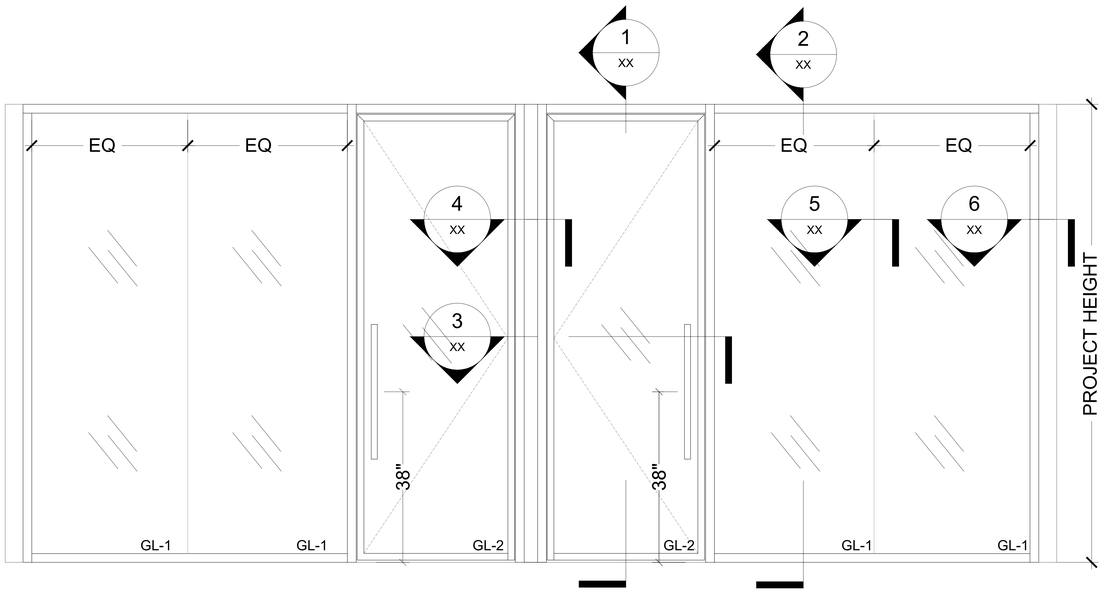

1 ELEVATION
1'-0"=1'-0"

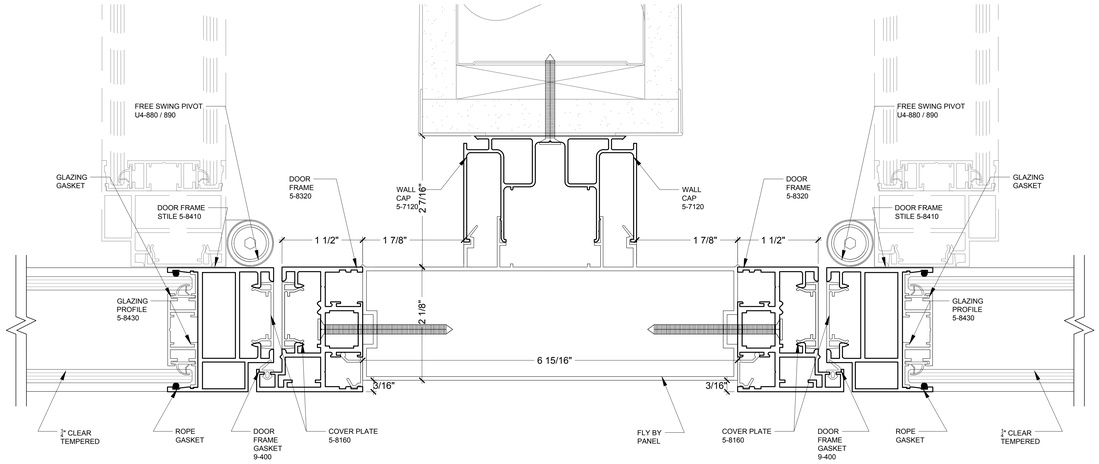

4 HINGE TO FLY BY
1'-0"=1'-0"

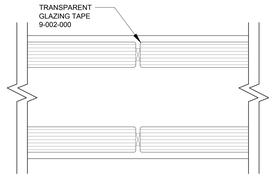

5 GLASS CONNECTION
1'-0"=1'-0"

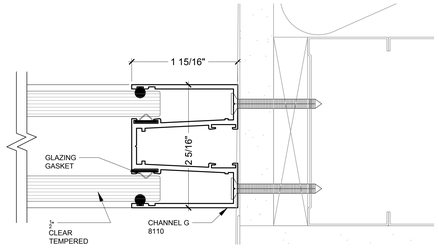

6 WALL ABUTMENT
1'-0"=1'-0"

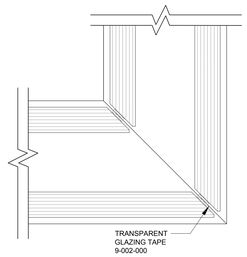

7 GLASS CORNER
1'-0"=1'-0"

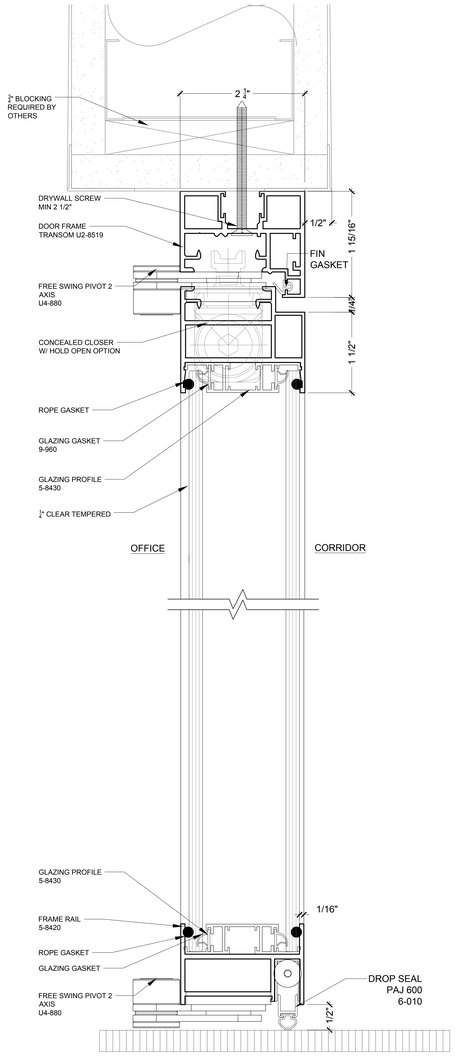

1 FRAMED OFFSET PIVOT DOOR
1'-0"=1'-0"

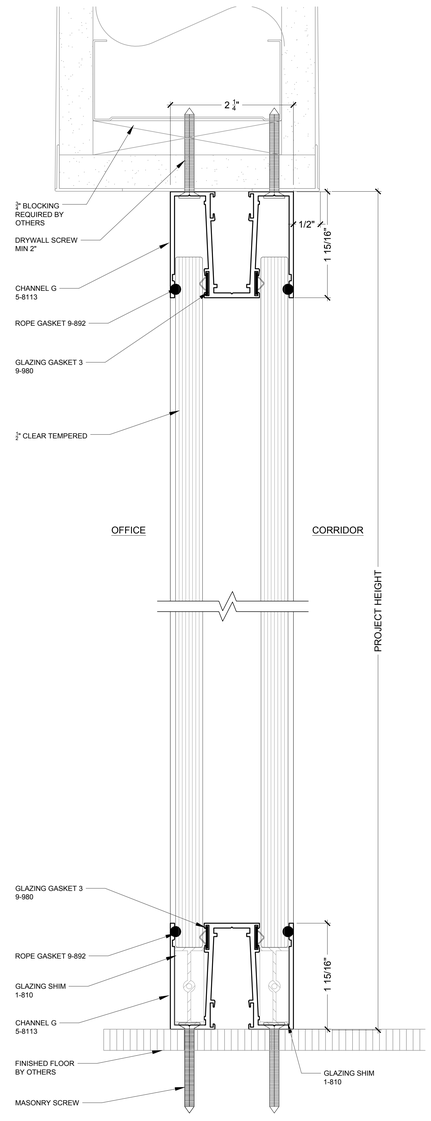

2 DOUBLE GLAZED FIXED CHANNEL
1'-0"=1'-0"

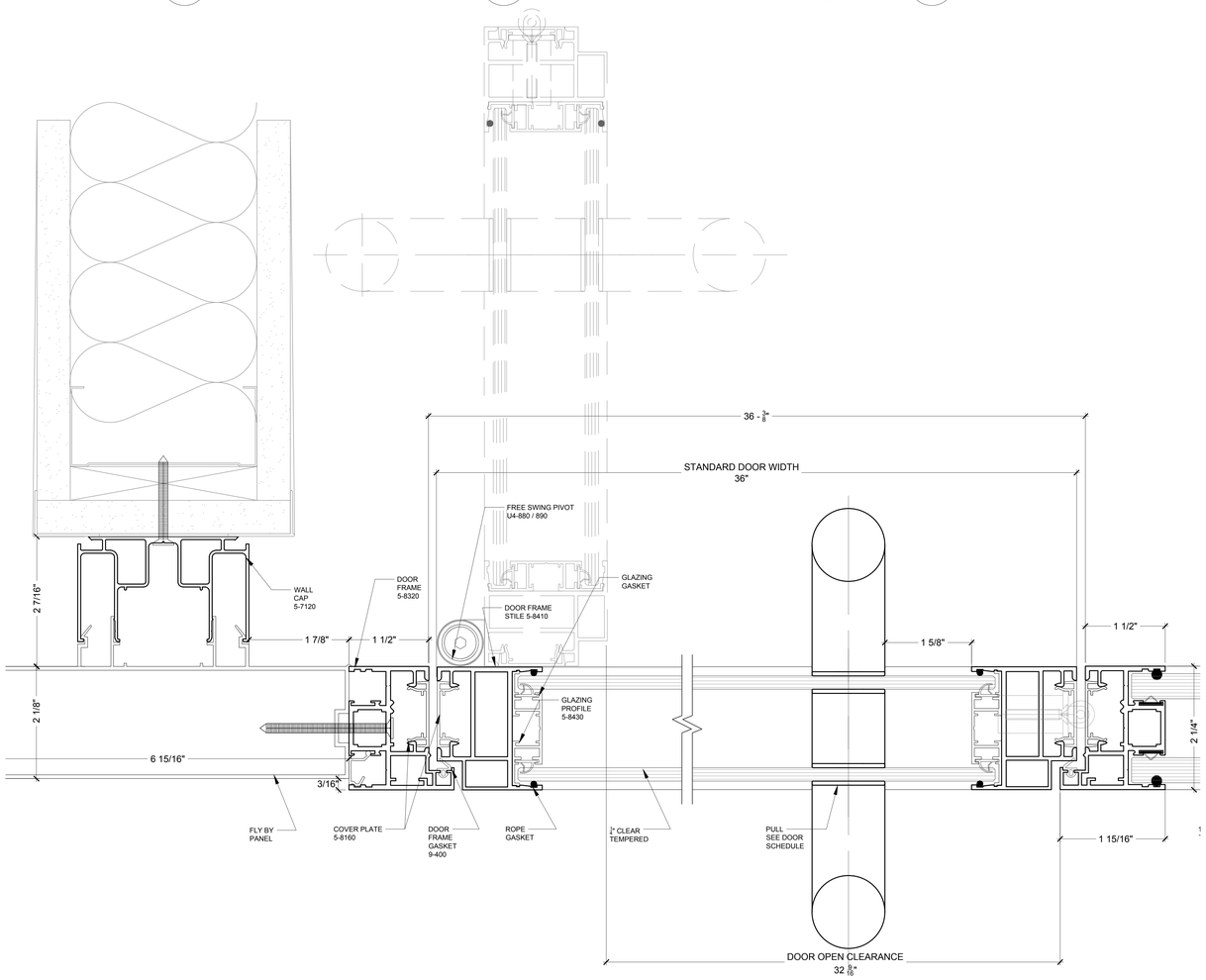

3 FRAMED DOUBLE GLAZED PIVOT DOOR W/ LADDER PULL
1'-0"=1'-0"

LEGEND:

No.	REVISED	DATE
1	Out for Approval	M-D-2011

Framed Double Glazed Pivot Door w/ Pull

PROJECT:

CLIPPER STANDARDS DRAWINGS

DRAWING TITLE:

FRAMED DOUBLE GLAZED PIVOT W- PULL

clipper ELANCE
225 Park Avenue South - Suite 201
New York, NY 10003
Tel. 212.647.6200
175 Morristown Rd., Ste 200
Basking Ridge, NJ 07920
Tel. 908.901.0001
WWW.WBWOOD.COM
• New York • New Jersey •
A Herman Miller Certified Network Member

PROJECT No.:	JOB NO.
DATE:	March 5, 2019
SCALE:	1' = 1'-0"
DRAWN BY:	NP
CHECKED BY:	XXX

Approved By:
Signature Date

These plans are an instrument of service and are the property of WB Wood. Infringements will be prosecuted.

File Path=I:\Sales\Clipper Walls\1_Hardware\Clipper\CLIPPER STANDARDS\LATEST WB WOOD CLIPPER LIBRARY.dwg Plot By:Apurra 2019-3-5 4:27 PM